FE45JA
天花式全金屬強力工業風扇

- 單速（可配調速器）, 220 - 240 V. 1 Ph, 50 Hz。
- E 級絕緣 , 內置恒溫器保護裝置, 同步電機搖擺，節能靜音。
- 扇葉採用鋁材板沖壓而成。扇葉均進行嚴謹的平衡工序。
- 密網（網線之間距不多於15mm）外表靜電噴塗，美觀耐用。
- 風扇可360度轉向 , 並可簡易調校送風角度，立體循環送風。
- 所有銷售型號之風扇均按 IEC60335-2-80 之標準進行測試，並已領有歐盟之安全認證。
- 功率因數（Power Factor）=0.97。

性能參數表

型號（香港規格）	型號說明	扇葉直徑 inch/mm	額定電壓 V/Ph/Hz	電機功率 W	最高轉速 RPM	最高風量 m^3/h	最高噪音 dB（A）
FE45JA	吸頂扇密網	18” / 450	220-240/1/50	140	1400	6720	56

噪音值是在距離風扇2米測量

產品安裝尺寸（mm）及維護

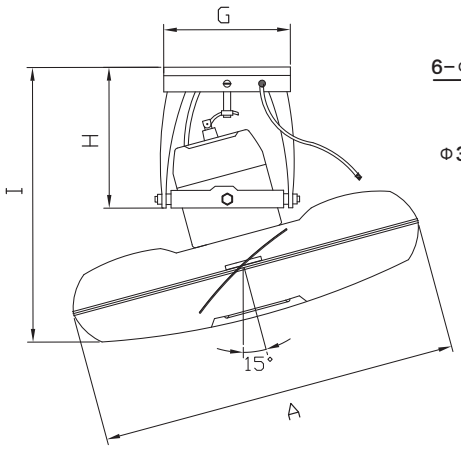

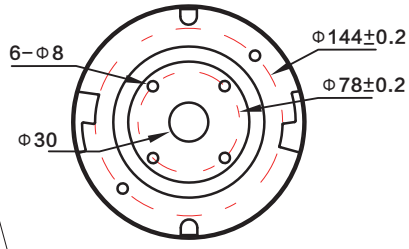

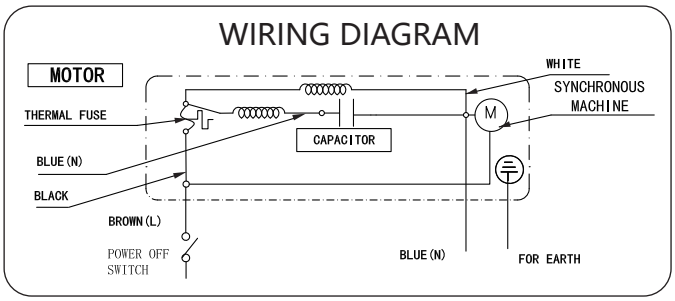

Model No	A	I	H	G
FE45JA	508	392	200	179

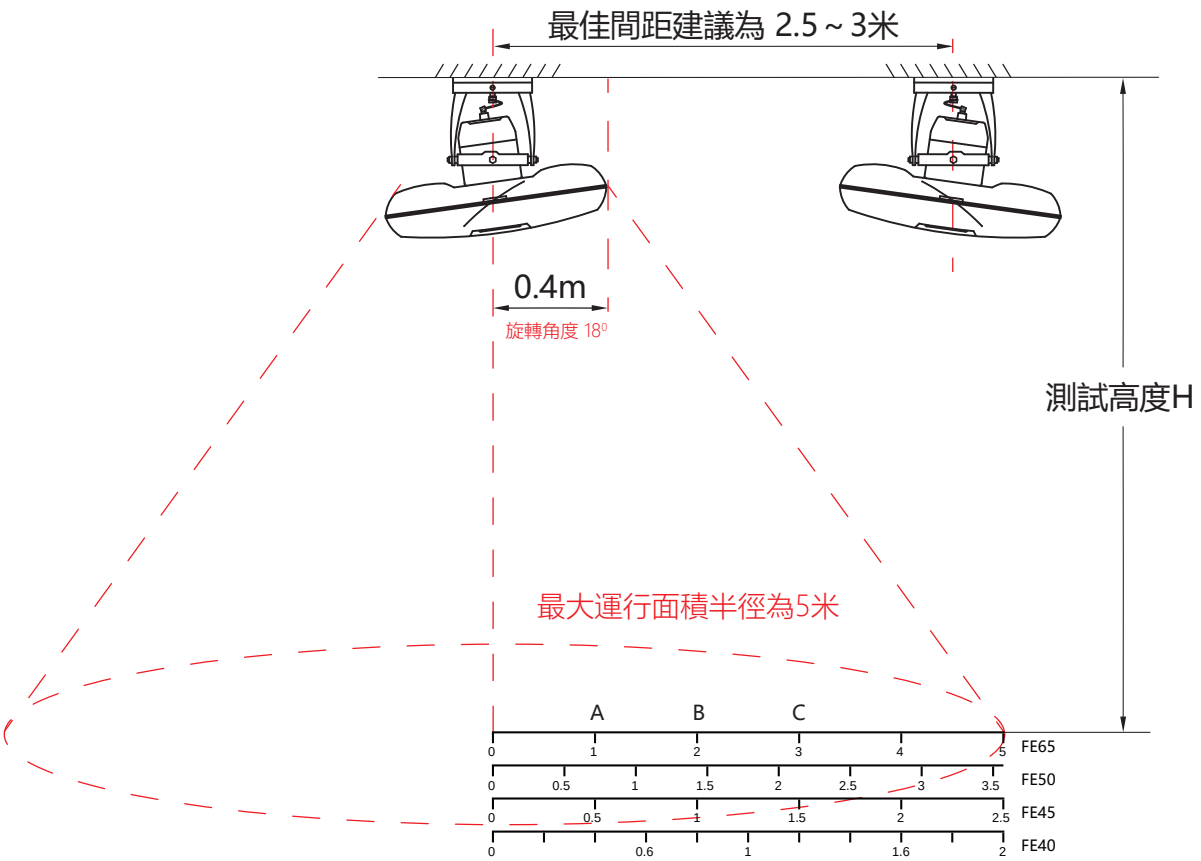

風扇各高度測試點的風速　　單位：m/s

	FE40		FE45		FE50		FE65	
測試高度H	3米	4米	3米	4米	3米	4米	3米	4米
測試點 A	0.99	0.9	1.21	1.1	1.32	1.2	1.54	1.4
測試點 B	1.43	1.3	2.15	1.95	2.56	2.33	1.70	1.54
測試點 C	0.66	0.6	1.89	1.72	2.13	1.94	2.59	2.35

工程安裝使用建議　　環境溫度≤45℃

	面積 (m^2)	高度 (m)	建議型號 (Model)	數量 (臺)
學校課堂	36	2	FE40/FE45	4
學校禮堂	36	3	FE50	4
物流倉庫	36	4	FE65	6

建議使用調速器

OPTIONAL SPEED CONTROLLER (NOT INCLUDED IN THE UNIT, CUSTOMER NEED TO PURCHASE THE CONTROLLER THEMSELVES)

Schneider Electric

Application Guide
Fan Speed Controller

CAT. NO.
KB31RF250

Vivace

IS18036

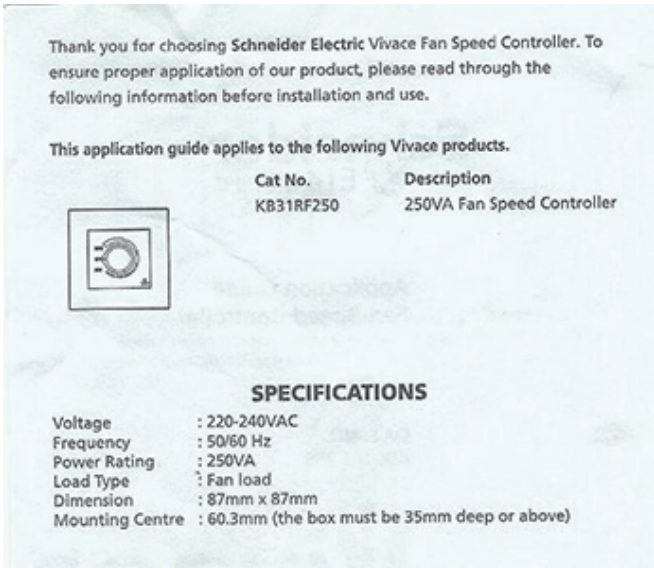

Thank you for choosing Schneider Electric Vivace Fan Speed Controller. To ensure proper application of our product, please read through the following information before installation and use.

This application guide applies to the following Vivace products.

Cat No.	Description
KB31RF250	250VA Fan Speed Controller

SPECIFICATIONS

Voltage	: 220-240VAC
Frequency	: 50/60 Hz
Power Rating	: 250VA
Load Type	: Fan load
Dimension	: 87mm x 87mm
Mounting Centre	: 60.3mm (the box must be 35mm deep or above)

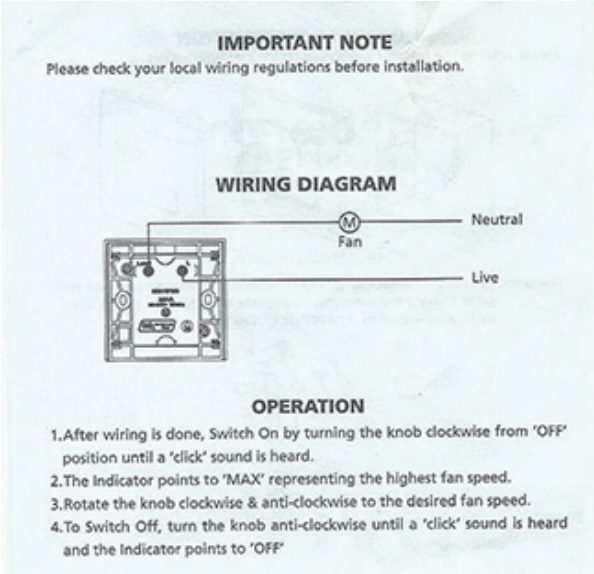

IMPORTANT NOTE

Please check your local wiring regulations before installation.

WIRING DIAGRAM

OPERATION

1. After wiring is done, Switch On by turning the knob clockwise from 'OFF' position until a 'click' sound is heard.
2. The Indicator points to 'MAX' representing the highest fan speed.
3. Rotate the knob clockwise & anti-clockwise to the desired fan speed.
4. To Switch Off, turn the knob anti-clockwise until a 'click' sound is heard and the Indicator points to 'OFF'

ATTENTION:

THE RATED POWER OF THE CONTROLLER MUST BE LARGER THAN 180W. OTHERWISES, THE FAN WILL BE DAMAGED !

SAFETY PRECAUTIONS

1. Do not use under the following situations
   1) Near to gaseous fuel cooker . 2) Place full of inflammable gas. 3) Place expose to rain or water pour.
   4) Near insecyicide,oil corrosive solvent. 5) High temperature. 6) High humldity .
   7) Near chemicals、oil、dust area.
2. Avoid continuosly exposure of direct wind from the fan,It may cause discomfort.
3. Do not put your fingers into the guard or any moving part of the fan, Causing injury.
4. Make sure all screws and connection are tightly screwed and secured. Causing injury.
5. Installation must strictly follow to wiring diagram provided, Can cause electrick shock, current leakage and fire if miswiring.
6. Ensure area of mounting fixture has sufficient strength, Do not fix at area exposed to strong vibration and knocking.
7. Never try to apart,repair or modify this product.Contact the dealer for repairing this product.
8. Disconnect power supply before cleaning.Otherwise it may cause electric shock.
9. Installation must be done by qualified electrician.
10. The safety wire must be always connected.
11. Do not connect this unit to power supply other than destinated country rated voltage.

證書

ZERTIFIKAT ◆ CERTIFICATE ◆ 認證證書 ◆ СЕРТИФИКАТ ◆ CERTIFICADO ◆ CERTIFICAT

TÜV SÜD Product Service

Attestation of Conformity

No. N8A 17 10 72582 029

Holder of Certificate: **WING TON FAN INDUSTRY LIMITED**
1B Kam Shing Industrial Building
1-11 Kwai Wing Road
Kowloon
HONG KONG

Product: **Fans (Ceiling Fan)**

Model(s): **FE40JA, FE40JB, FE40JC, FE40JD, FE40JR, FE40JS, FE45JA, FE45JB, FE45JC, FE45JD, FE45JR, FE45JS, FE50JA, FE50JB, FE50JC, FE50JD, FE50JR, FE50JS, FE65JA, FE65JB, FE65JC, FE65JD, FE65JR, FE65JS**

Parameters:

Rated Input :	220-240VAC, 50Hz; 110W, 0.52A (for FE40JA, FE40JB, FE40JC, FE40JD, FE40JR and FE40JS) 140W, 0.63A (for FE45JA, FE45JB, FE45JC, FE45JD, FE45JR and FE45JS) 150W, 0.66A (for FE50JA, FE50JB, FE50JC, FE50JD, FE50JR and FE50JS) 160W, 0.75A (for FE65JA, FE65JB, FE65JC, FE65JD, FE65JR and FE65JS)
Protection Class :	I
Degree of Protection :	IPX0

Tested according to:
EN 60335-2-80:2003/A2:2009
EN 60335-1:2012/A12:2017
EN 62233:2008

This Attestation of Conformity is issued on a voluntary basis according to the Low Voltage Directive 2014/35/EU relating to electrical equipment designed for use within certain voltage limits. It confirms that the listed equipment complies with the principal protection requirements of the directive and is based on the technical specifications applicable at the time of issuance. It refers only to the particular sample submitted for testing and certification. See also notes overleaf.

Test report no.: 681101718201

TÜV 755051

Date, 2017-11-02 (Kelvin Zeng)

CE After preparation of the necessary technical documentation as well as the EU declaration of conformity the required CE marking can be affixed on the product. The declaration of conformity is issued under the sole responsibility of the manufacturer. Other relevant EU-directives have to be observed.

Page 1 of 1

A1 / 07.17

TÜV SÜD Product Service GmbH · Zertifizierstelle · Ridlerstraße 65 · 80339 München · Germany

TÜV®

IEC IECEE CB SCHEME

Ref. Certif. No.

SG PSB-HS-05617

IEC SYSTEM FOR MUTUAL RECOGNITION OF TEST CERTIFICATES FOR ELECTRICAL EQUIPMENT (IECEE) CB SCHEME

CB TEST CERTIFICATE

Product	Fans (Ceiling Fan)
Name and address of the applicant	**Sam Hing Cheung Fans And Equipment Limited** Flat B, 1/F., Kam Shing Industrial Building 1-11 Kwai Wing Road Kwai Chung HONG KONG
Name and address of the manufacturer	Sam Hing Cheung Fans And Equipment Limited Flat B, 1/F., Kam Shing Industrial Building, 1-11 Kwai Wing Road, Kwai Chung, HONG KONG
Name and address of the factory	FOSHAN SHUNDE SAM HING CHEUNG FANS AND EQUIPMENT LIMITED No.1 Building, No.1 Road Guangda Market, Leiliu Town, Shunde District, 528322 Foshan, PEOPLE'S REPUBLIC OF CHINA
Ratings and principal characteristics	Rated Input : 220-240VAC, 50Hz. See test report for details Protection Class : I Degree of Protection : IPX0
Model/type Ref.	FE40JA, FE40JB, FE40JC, FE40JD, FE40JR, FE40JS, FE45JA, FE45JB, FE45JC, FE45JD, FE45JR, FE45JS, FE50JA, FE50JB, FE50JC, FE50JD, FE50JR, FE50JS, FE65JA, FE65JB, FE65JC, FE65JD, FE65JR, FE65JS
A sample of the product was tested and found to be in conformity with	IEC 60335-1:2010 IEC 60335-1:2010/AMD1:2013 IEC 60335-1:2010/AMD2:2016 IEC 60335-2-80:2015
as shown in the Test Report Ref. No. which forms part of this certificate	211-700425-000

This CB Test Certificate is issued by the National Certification Body

CBS 072582 0037 Rev. 00

Date, 2019-09-17

(Darius Guo)

Page 1 of 2

TÜV SÜD PSB Pte Ltd • 1 Science Park Drive • Singapore 118221

TÜV SÜD PSB Singapore

CB-1 03.06

Zertifikat *Certificate*

TÜV

Zertifikat Nr. *Certificate No.*
R 50105972

Blatt *Page*
0001

Ihr Zeichen *Client Reference*	Unser Zeichen *Our Reference*	Ausstellungsdatum	*Date of Issue (day/mo/yr)*
	05-SLE- 16009569 002	01.06.2007	

Genehmigungsinhaber *License Holder*
Xunde Electrical and Electronic
Co., Ltd.
Juwei Industry Zone
Beijiao, Shunde
Foshan, Guangdong
P.R. China

Fertigungsstätte *Manufacturing Plant*
Xunde Electrical and Electronic
Co., Ltd.
Juwei Industry Zone
Beijiao, Shunde
Foshan, Guangdong
P.R. China

Prüfzeichen *Test Mark*

TÜV Rheinland Product Safety — BAUART GEPRÜFT / TYPE APPROVED

Geprüft nach *Tested acc. to*
EN 60252-1:2001

Zertifiziertes Produkt **(Geräteidentifikation)** — **Lizenzentgelte - Einheit**
Certified Product *(Product Identification)* — *License Fee - Unit*

Motor-Kondensator (AC Motor Capacitor)

Type Designation	: CBB61	6
Rated Voltage	: AC 450V	
Class of Operation	: Class A	
Rated Frequency	: 50/60Hz	
Rated Capacitance	: 0,47µF to 8µF (Refer to Appendix 1 for Details)	
Capacitance Tolerance	: ±5%	
Climatic Category	: 40/85/21	
Type of Termination	: Tab or lead wire	
Class of Safety Protection	: P2	
Type of Operation	: Continuous Operation	
Self-healing Capacitor	: Yes	

Remark : The labelling requirements acc. to EU Directive 2001/95 have to be observed for distribution within the EEA.

6

ANLAGE (Appendix): 1

Dem Zertifikat liegt unsere Prüf- und Zertifizierungsordnung zugrunde.
Das Produkt entspricht den o.g. Anforderungen, die Herstellung wird überwacht.
This certificate is based on our Testing and Certification Regulation. The product fulfills above mentioned requirements, the production is subject to surveillance.

TÜV Rheinland Product Safety GmbH — TÜV — Zertifizierungsstelle

Zertifizierungsstelle

TÜV Rheinland Product Safety GmbH, Am Grauen Stein, D-51105 Köln
Tel.: (+49/221)8 06 - 13 71 e-mail: cert-validity@de.tuv.com
Fax: (+49/221)8 06 - 39 35 http://www.tuv.com/safety

Dipl.-Ing. (FH) T. Zimmer

10/020 7.95Q

Zertifikat *Certificate*

TÜVRheinland

Zertifikat Nr. *Certificate No.*
R 50105972

Blatt *Page*
0002

Ihr Zeichen *Client Reference*	**Unser Zeichen** *Our Reference*	**Ausstellungsdatum**	*Date of Issue (day/mo/yr)*
	05-YFC- 16009569 004	22.11.2013	

Genehmigungsinhaber *License Holder*
Xunde Electrical and Electronic
Co., Ltd.
Juwei Industry Zone
Beijiao, Shunde
Foshan, Guangdong
P.R. China

Fertigungsstätte Manufacturing Plant
Xunde Electrical and Electronic
Co., Ltd.
Juwei Industry Zone
Beijiao, Shunde
Foshan, Guangdong
P.R. China

Prüfzeichen *Test Mark*

TÜVRheinland CERTIFIED
Type Approved
Safety
Regular Production Surveillance
www.tuv.com
ID 2000000000

Geprüft nach *Tested acc. to*
EN 60252-1:2011

Zertifiziertes Produkt (Geräteidentifikation)
Certified Product (Product Identification)

Lizenzentgelte - Einheit
License Fee - Unit

Motor Capacitor (AC Motor Capacitor)

as page 0001

Change

Test Requirement : see above

Remark : The labelling requirements acc. to EU Directive 2001/95 have to be observed for distribution within the EEA. The installation has to be carried out according to installation instruction accompanying the products.

TÜV Rheinland LGA Products GmbH Zertifizierungsstelle

Dem Zertifikat liegt unsere Prüf- und Zertifizierungsordnung zugrunde und es bestätigt die Konformität des Produktes mit den oben genannten Standards und Prüfgrundlagen. Zusätzliche Anforderungen in Ländern, in denen das Produkt in Verkehr gebracht werden soll, müssen zusätzlich betrachtet werden. Die Herstellung des zertifizierten Produktes wird überwacht.
This certificate is based on our Testing and Certification Regulation and states the conformity of the product with the standards and testing requirements as indicated above. Any additional requirements in countries where the product is going to be marketed have to be considered additionally. The manufacturing of the certified product is subject to surveillance.

Zertifizierungsstelle

G. Yin

TÜV Rheinland LGA Products GmbH - Tillystraße 2 - 90431 Nürnberg
Tel.: (+49/221)8 06 - 13 71 e-mail: cert-validity@de.tuv.com
Fax: (+49/221)8 06 - 39 35 http://www.tuv.com/safety

Zertifikat *Certificate*

TÜVRheinland®

Zertifikat Nr. *Certificate No.*
R 50105972

Blatt *Page*
0004

Ihr Zeichen *Client Reference*	**Unser Zeichen** *Our Reference*	**Ausstellungsdatum**	*Date of Issue (day/mo/yr)*
	05-YFC- 16009569 007	13.01.2014	

Genehmigungsinhaber *License Holder*
Xunde Electrical and Electronic
Co., Ltd.
Juwei Industry Zone
Beijiao, Shunde
Foshan, Guangdong
P.R. China

Fertigungsstätte Manufacturing Plant
Xunde Electrical and Electronic
Co., Ltd.
Juwei Industry Zone
Beijiao, Shunde
Foshan, Guangdong
P.R. China

Prüfzeichen *Test Mark*

Type Approved
Safety
Regular Production
Surveillance
TÜVRheinland
CERTIFIED
www.tuv.com
ID 2000000000

Geprüft nach *Tested acc. to*
EN 60252-1:2011
IEC 60252-1:2010

Zertifiziertes Produkt (Geräteidentifikation)
Certified Product (Product Identification)

Lizenzentgelte - Einheit
License Fee - Unit

Motor Capacitor (AC Motor Capacitor)

as pages 0001-0002

Change

Test requirement : see above

Addition

Type Designation : CBB61-A 6
Rated Voltage : AC 250/400V

Remark : The labelling requirements acc. to EU Directive 2001/95 have to be observed for distribution within the EEA. The installation has to be carried out according to installation instruction accompanying the products.

TÜV Rheinland LGA Products GmbH
TÜVRheinland
Zertifizierungsstelle

6

Dem Zertifikat liegt unsere Prüf- und Zertifizierungsordnung zugrunde und es bestätigt die Konformität des Produktes mit den oben genannten Standards und Prüfgrundlagen. Zusätzliche Anforderungen in Ländern, in denen das Produkt in Verkehr gebracht werden soll, müssen zusätzlich betrachtet werden. Die Herstellung des zertifizierten Produktes wird überwacht.
This certificate is based on our Testing and Certification Regulation and states the conformity of the product with the standards and testing requirements as indicated above. Any additional requirements in countries where the product is going to be marketed have to be considered additionally. The manufacturing of the certified product is subject to surveillance.

Zertifizierungsstelle

G. Yin

TÜV Rheinland LGA Products GmbH - Tillystraße 2 - 90431 Nürnberg
Tel.: (+49/221)8 06 - 13 71 e-mail: cert-validity@de.tuv.com
Fax: (+49/221)8 06 - 39 35 http://www.tuv.com/safety

10/020 d 04.08 TÜV, TÜEV and TÜV are registered trademarks. Utilisation and application requires prior approval.